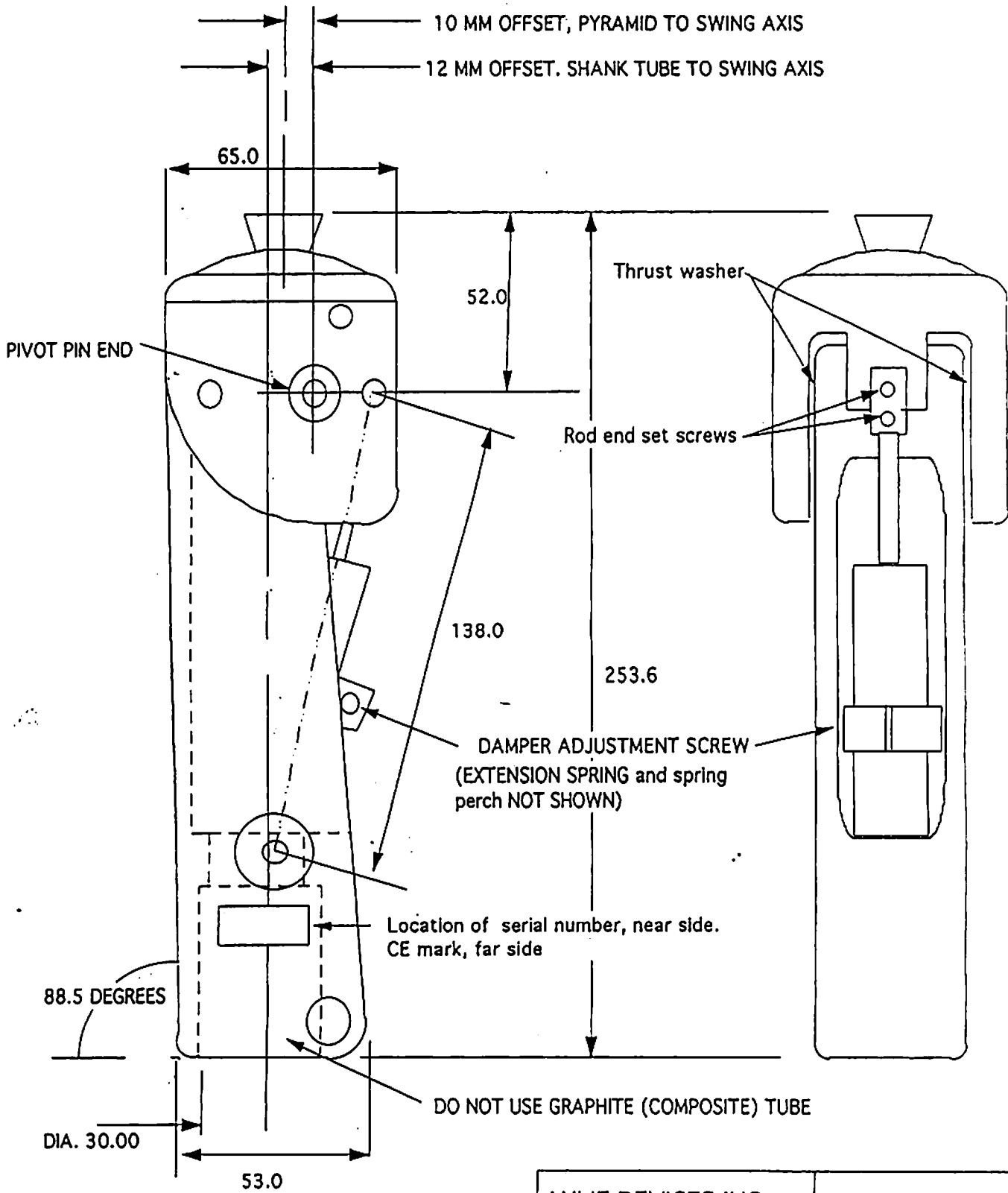

AULIE DEVICES INC.
3615 NORTHWEST WAY
REDMOND, OREGON
97756 USA
001 541 548 7355